Installation 230V

1

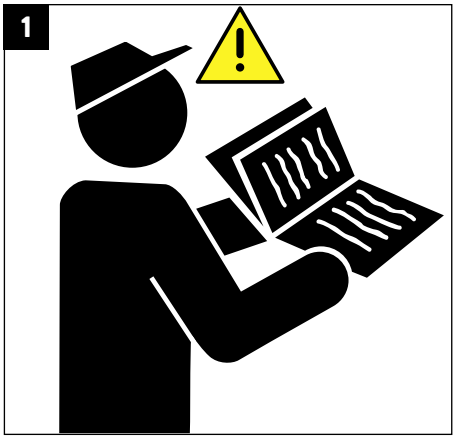

2

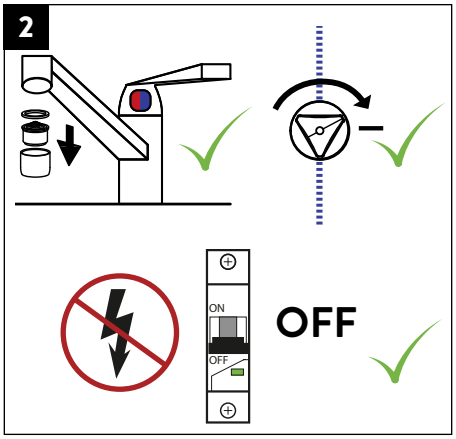

3

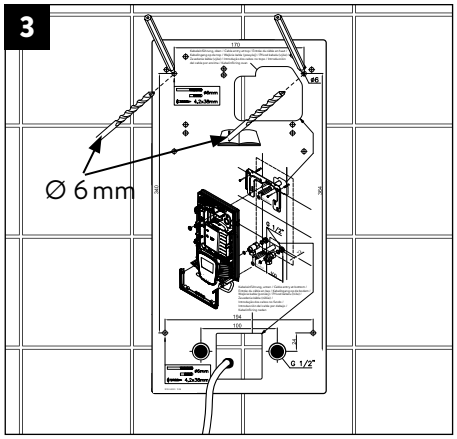

4

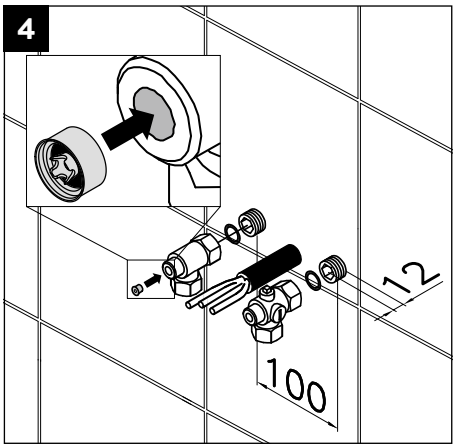

5

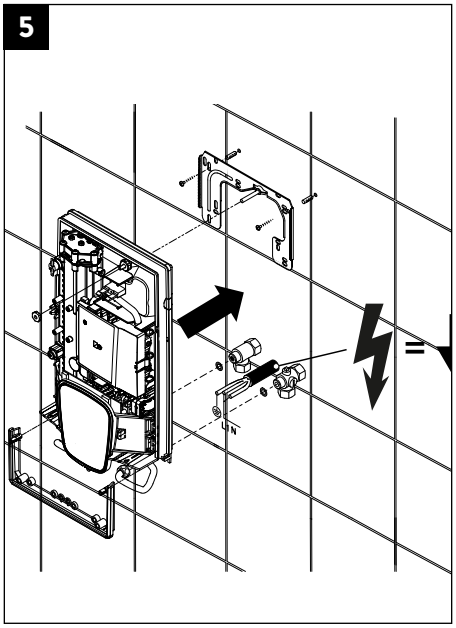

6

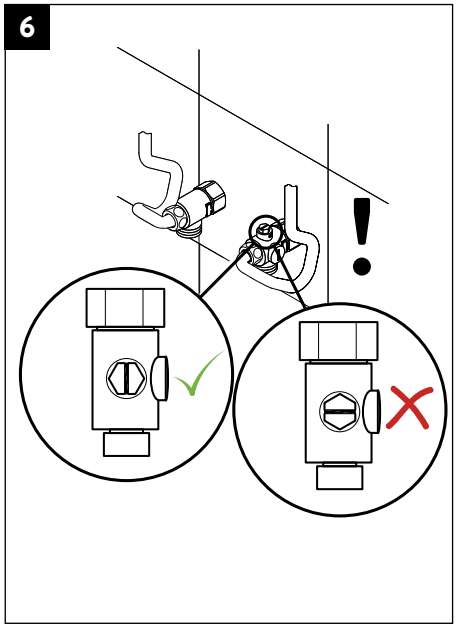

7

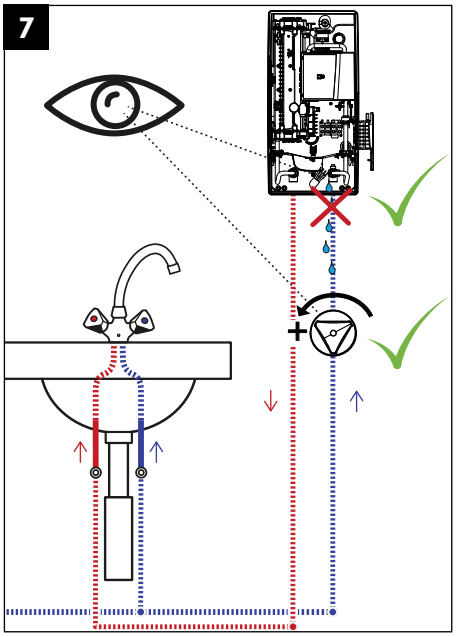

8

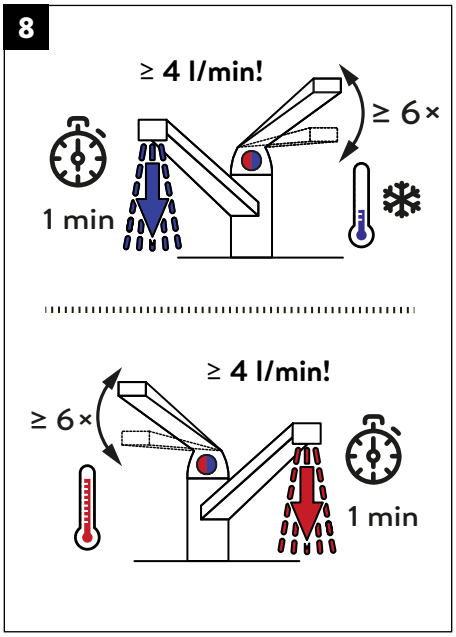

9

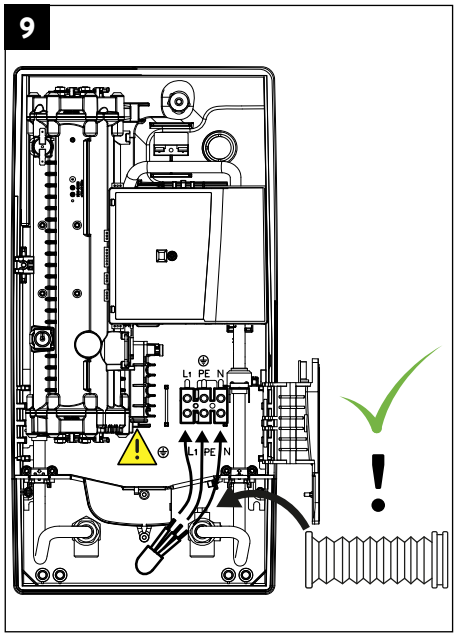

Installation 230V

10

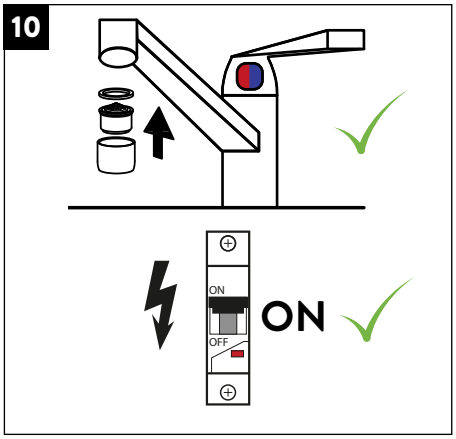

11

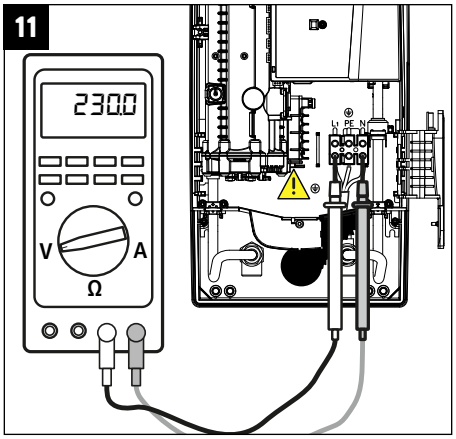

12

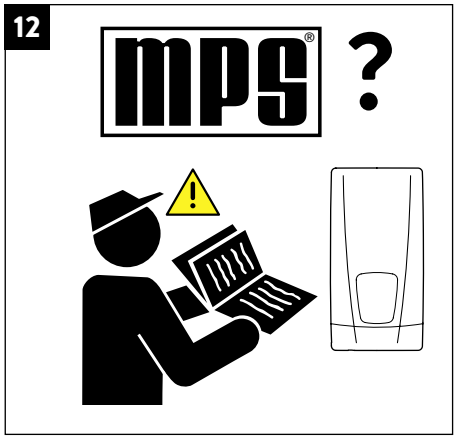

13

DEX12 Next
DEX12 Next L

8,8 / 11,5 kW

14

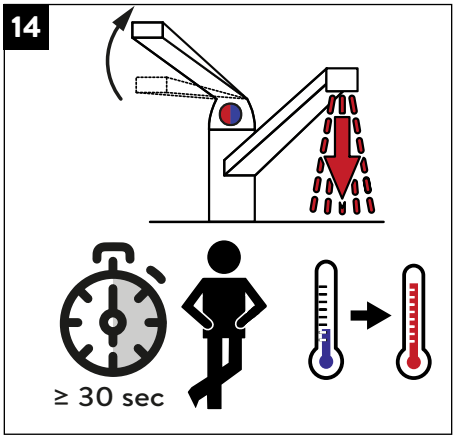

15

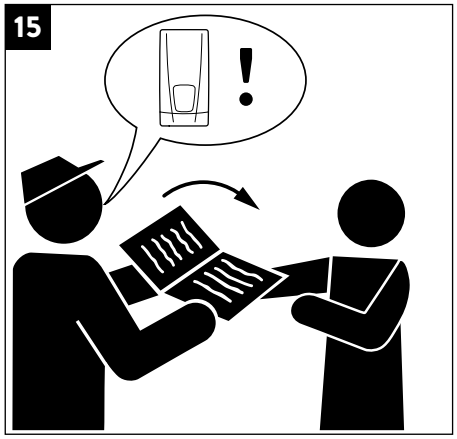

Fehler? / Error? / Erreurs?

1

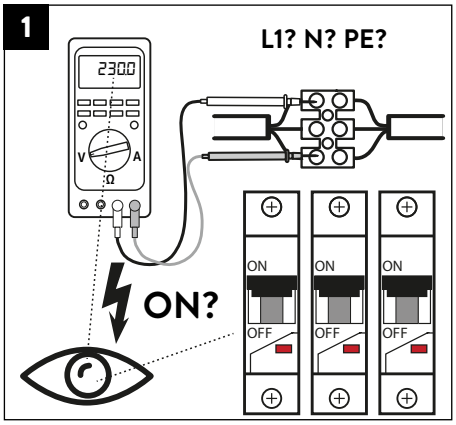

2

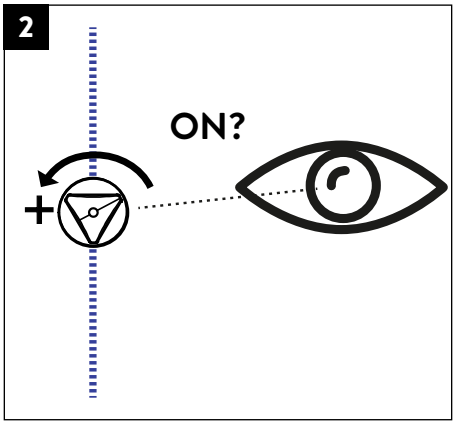

3

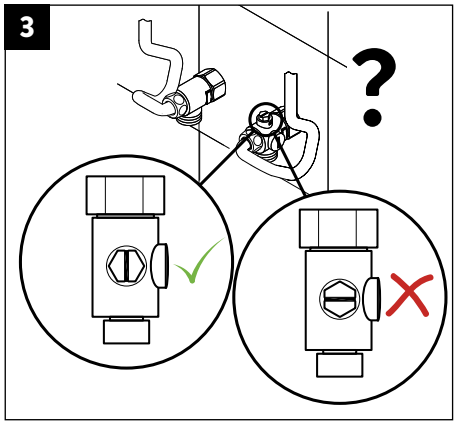

4

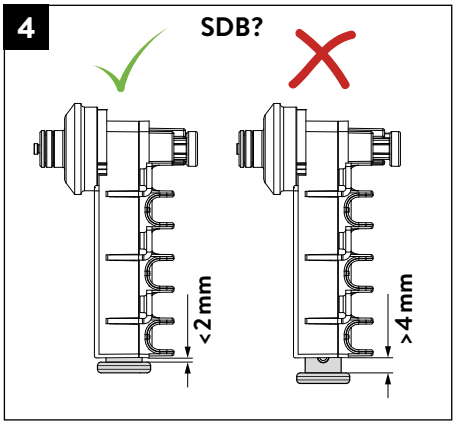

5

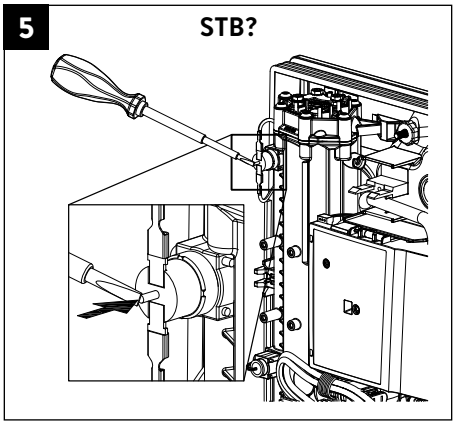
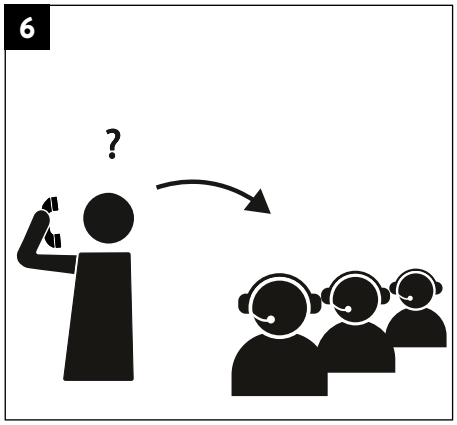
6